Search Go

Gazebos
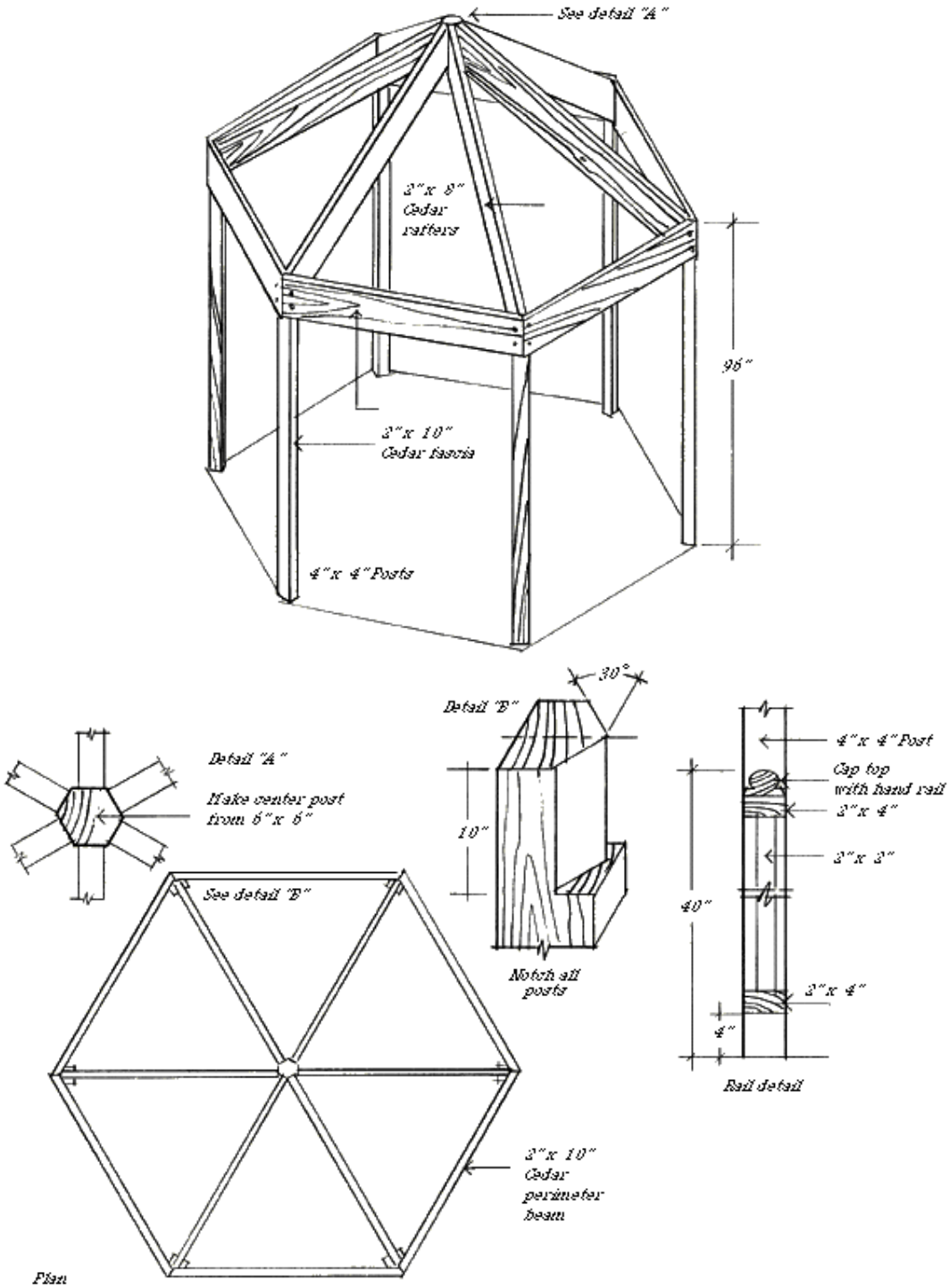
Basic Pavillion