Search Go

Arbors

Rose Arbor

The dimensions of this free standing Cedar rose arbor or gateway in your garden will be determined by the width of the walkway it traverses. Be sure to make it wide enough to allow garden furniture and equipment to pass through.

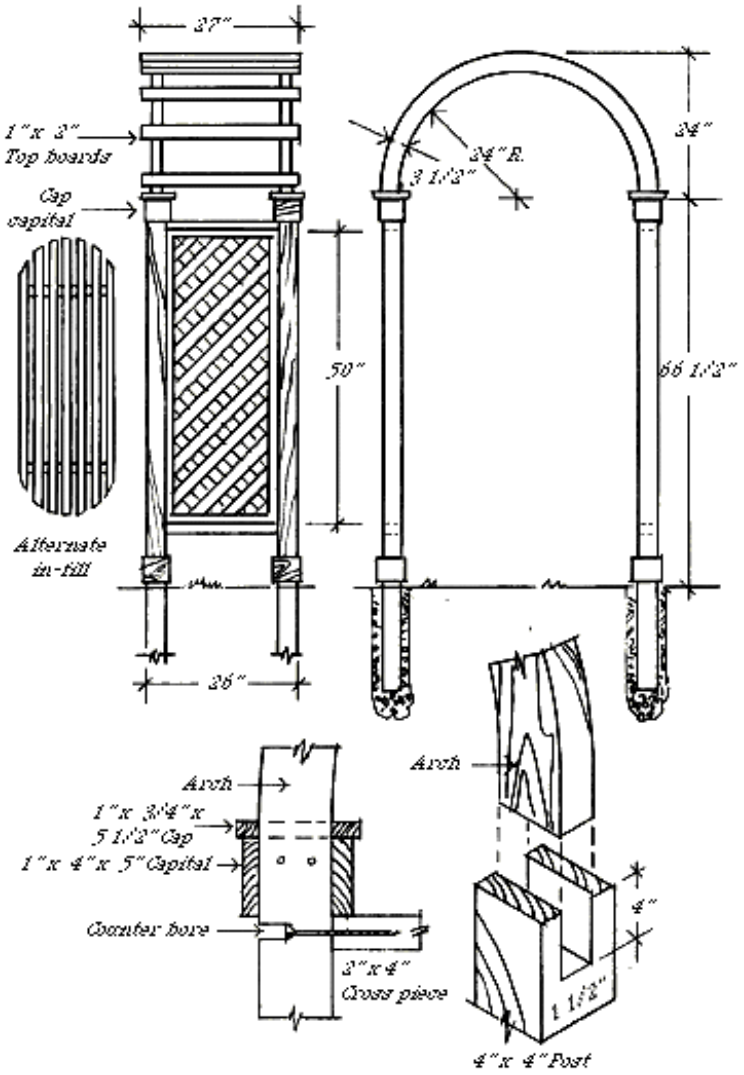
37"
1"x 3"
Top boards
Cap
capital
Alternate
in-fill
50"
36"
34"
34"R.
3 1/2"
66 1/2"
Arch
1"x 3/4"x
5 1/2" Cap
1"x 4"x 5" Capital
Counter bore
3"x 4"
Cross piece
Arch
4"
1 1/2"
4"x 4" Post