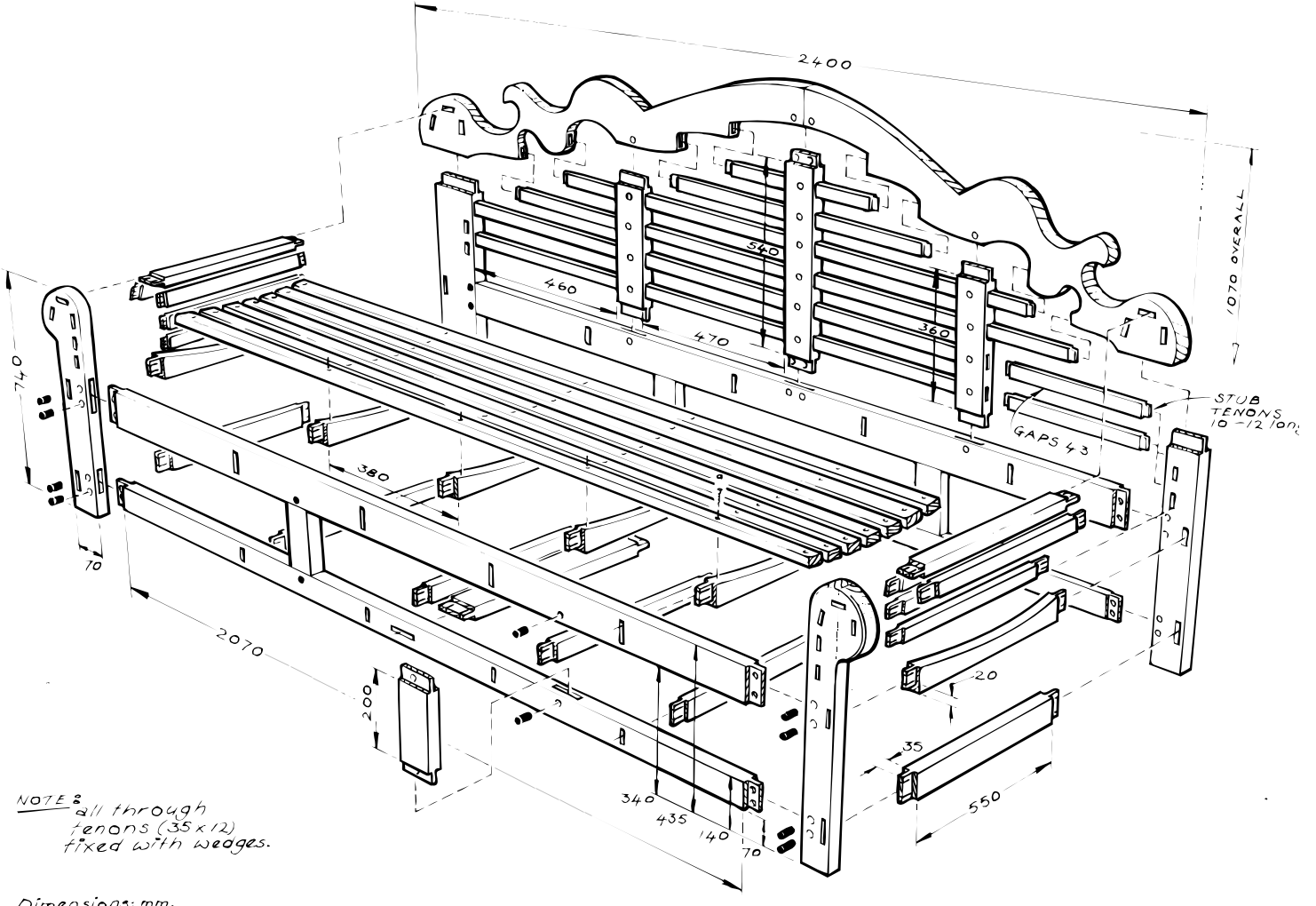

NOTE: all through tenons (35 x 12) fixed with wedges.

Dimensions: mm.