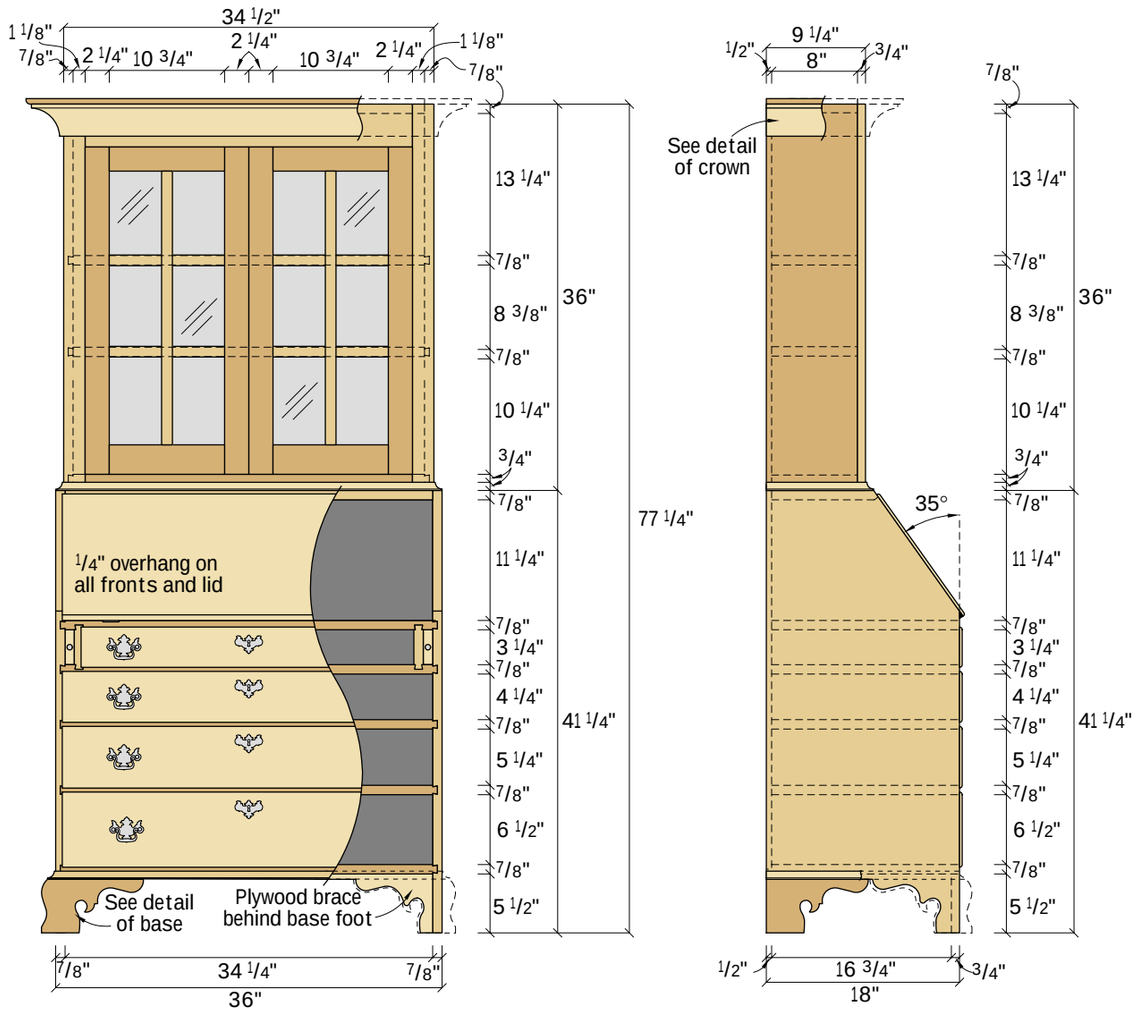

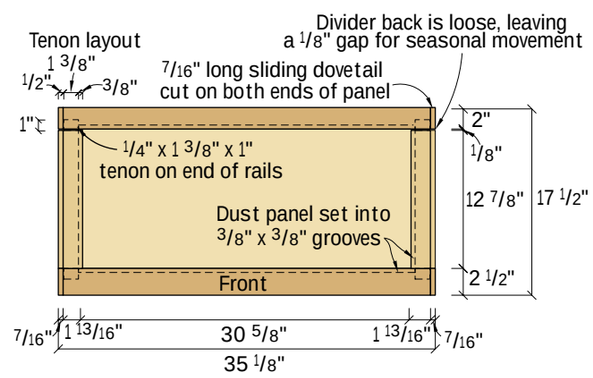

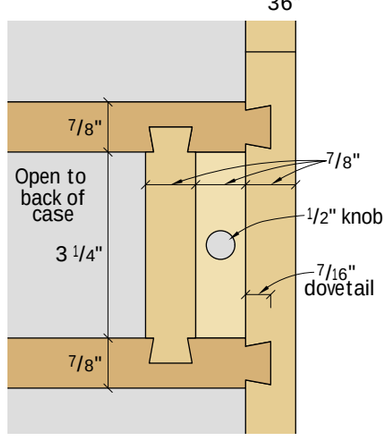

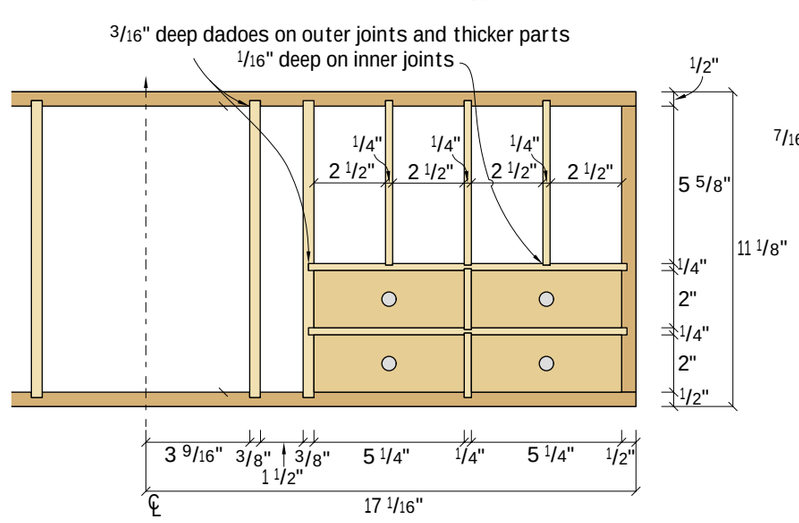

Schedule of Materials: Traditional Secretary

Lower Case			
No.	Item	Dimensions T W L	Material
2	Sides	7/8" x 18" x 41 1/4"	P
1	Case top	7/8" x 10 1/8" x 35 1/8"	P
1	Desktop	7/8" x 17 1/2" x 35 1/8"	P
4	Divider fronts	7/8" x 2 1/2" x 35 1/8"	P
4	Divider backs	7/8" x 2" x 35 1/8"	P
6	Divider rails	7/8" x 2 1/4" x 14 7/8"	P
2	Divider rails (top)	7/8" x 3 1/2" x 14 7/8"	P
2	Vertical rails	7/8" x 3/4" x 4 1/8"	P
4	Lid suppt guides	7/8" x 3/4" x 12"	S
3	Lower panels	3/8" x 13 5/8" x 31 3/8"	S
1	Top panel	3/8" x 13 5/8" x 28 7/8"	S
1	Drop lid panel	7/8" x 13 7/8" x 32 3/4"	P
2	Breadbords	7/8" x 2" x 13 7/8"	P
2	Lid supports	7/8" x 3 1/4" x 17"	P
2	Support ends	7/8" x 2" x 3 1/4"	P
1	Feet support strip	3/4" x 5 1/2" x 34 1/4"	Ply
	Back	1/2" x 35" x 41 1/4"	S
	Ogee feet	1 1/4" x 5" x 7'	P
	Cove mould	3/4" x 3/4" x 14'	P
Upper Case			
2	Sides	7/8" x 8 1/2" x 36"	P
4	Shelves and top	7/8" x 8" x 33 5/8"	P
2	Face frame stiles	3/4" x 2" x 36"	P
1	Face frame top rail	3/4" x 4" x 32 1/2"	P
1	Face frame bot rail	3/4" x 1 1/2" x 32 1/2"	P
	Back	1/2" x 33 1/2" x 36"	S
	Cove mould	7/8" x 4 1/2" x 6 1/2'	P
	Moulding cap	1/2" x 4 1/4" x 6 1/2'	P
Upper Case Doors			
4	Stiles	3/4" x 2 1/4" x 30 1/2"	P
2	Top rails	3/4" x 2 1/4" x 11 3/8"	P
2	Bott rails	3/4" x 2 3/4" x 11 3/8"	P
2	Vert mullions	3/4" x 3/4" x 26 1/8"	P
8	Horiz mullions	3/4" x 3/4" x 5 5/8"	P
Lower Case Drawers			
1	Front A	7/8" x 7" x 34 3/4"	P
1	Front B	7/8" x 5 3/4" x 34 3/4"	P
1	Front C	7/8" x 4 3/4" x 34 3/4"	P
1	Front D	7/8" x 3 3/4" x 31 1/4"	P
2	Sides A	1/2" x 6 3/8" x 17 1/4"	S
2	Sides B	1/2" x 5 1/8" x 17 1/4"	S
2	Sides C	1/2" x 4 1/8" x 17 1/4"	S
2	Sides D	1/2" x 3 1/8" x 17 1/4"	S
1	Back A	1/2" x 5 3/8" x 34 1/8"	S
1	Back B	1/2" x 4 1/8" x 34 1/8"	S
1	Back C	1/2" x 3 1/8" x 34 1/8"	S
1	Back D	1/2" x 2 1/8" x 30 5/8"	S
1	Bottom	1/2" x 17 1/2" x 30 1/8"	S
3	Bottoms	1/2" x 17 1/2" x 33 5/8"	S
Insert			
2	Sides	1/2" x 8 1/2" x 11 1/8"	P
2	Top & bott	1/2" x 8 1/2" x 34 1/8"	P
4	Large vert dividers	3/8" x 8 1/2" x 10 1/2"	P
4	Shelves	1/4" x 8 1/2" x 11 1/8"	P
6	Dividers	1/4" x 8 1/2" x 5 7/8"	P
4	Dividers	1/4" x 2 1/8" x 8 1/2"	P
8	Pigeonhole arches	1/4" x 2" x 2 1/2"	P
Column drawers			
4	Front & back	1/2" x 1 7/16" x 10"	S
4	Tops & botts	1/2" x 1 7/16" x 8 1/4"	S
2	Sides	1/2" x 7 3/4" x 9 3/4"	S
2	Column backer	1/4" x 2" x 11 1/16"	P
2	Beaded boards	1/4" x 1 1/2" x 7"	P
4	Plinths	5/8" x 2" x 2"	P
Insert drawers and door			
8	Fronts	1/2" x 1 15/16" x 5 3/16"	P
8	Backs	3/8" x 1 5/8" x 5 3/16"	S
16	Sides	3/8" x 1 15/16" x 8 1/8"	S
8	Bottoms	1/4" x 4 13/16" x 8"	S
2	Door stiles	11/16" x 1 1/2" x 10 1/16"	P
1	Bott rail	11/16" x 1 1/2" x 5 1/4"	P
1	Top rail	11/16" x 3" x 5 1/4"	P
1	Panel	1/4" x 5 1/8" x 7 3/4"	P

P=Maple • S=Poplar

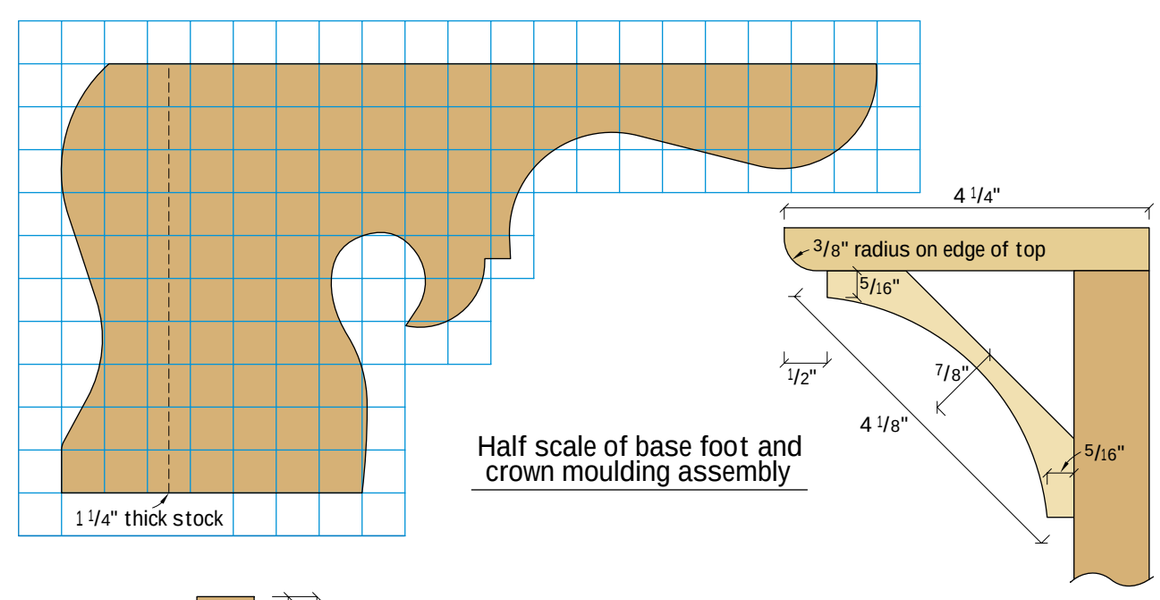
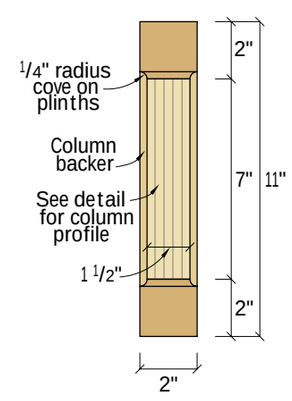
Half scale of base foot and crown moulding assembly