Search Go

Gazebos

Hot Tub

The basic frame with open roof is used here to add style and architectural interest to a hot tub set into a Cedar deck.

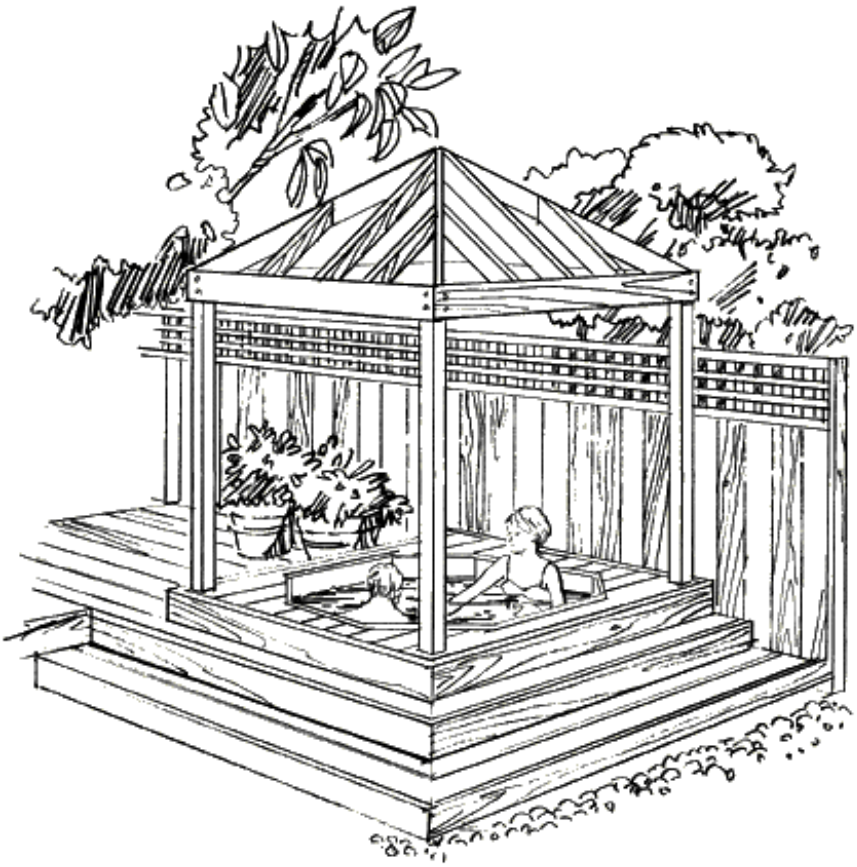

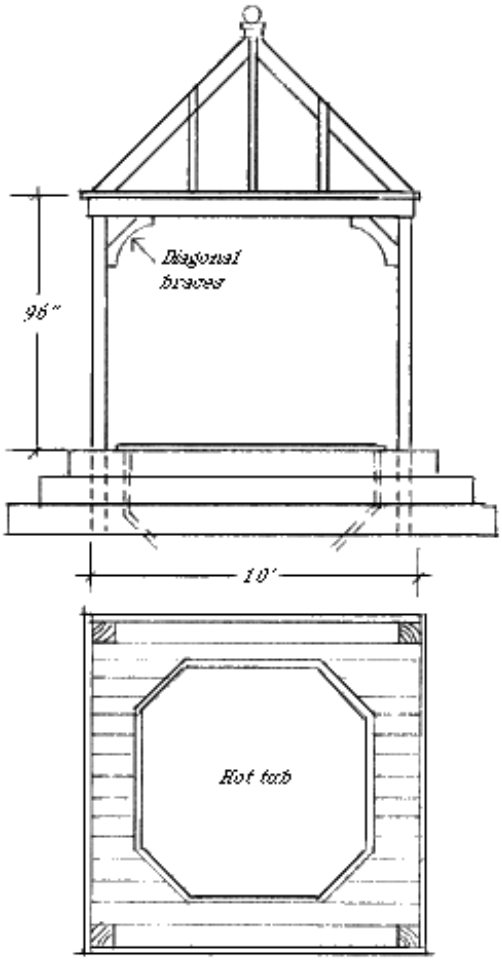
Diagonal braces
96"
10'
Hot tub