AQA

Please write clearly in block capitals.

Centre number | | | | | | Candidate number | | | | |

Surname _____

Forename(s) _____

Candidate signature _____

GCSE
MATHEMATICS

F

Foundation Tier Paper 1 Non-Calculator

Tuesday 21 May 2019 Morning Time allowed: 1 hour 30 minutes

Materials

For this paper you must have:
- mathematical instruments

You must **not** use a calculator.

Instructions
- Use black ink or black ball-point pen. Draw diagrams in pencil.
- Fill in the boxes at the top of this page.
- Answer **all** questions.
- You must answer the questions in the spaces provided. Do not write outside the box around each page or on blank pages.
- Do all rough work in this book. Cross through any work you do not want to be marked.

Information
- The marks for questions are shown in brackets.
- The maximum mark for this paper is 80.
- You may ask for more answer paper, graph paper and tracing paper. These must be tagged securely to this answer book.

For Examiner's Use	
Pages	Mark
2–3	
4–5	
6–7	
8–9	
10–11	
12–13	
14–15	
16–17	
18–19	
20–21	
22–23	
24–25	
26	
TOTAL	

Advice
In all calculations, show clearly how you work out your answer.

Do not write outside the box

Answer **all** questions in the spaces provided

1 Which type of angle is the largest?

Circle your answer.

[1 mark]

right reflex obtuse acute

2 Solve $4x = 8$

Circle your answer.

[1 mark]

$x = 0.5$ $x = 2$ $x = 4$ $x = 32$

3 Work out $10 + (-4)$

Circle your answer.

[1 mark]

-14 -6 6 14

Do not write outside the box

4 Circle the calculation which works out half of 12

[1 mark]

$12 \div 0.5$ $\quad$ $2 \div 12$ $\quad$ $12 \times \frac{1}{2}$ $\quad$ $12 \div 50 \times 100$

5 (a) Work out $364.5 + 17.9 - 2.08$

[2 marks]

Answer _____

5 (b) Work out 9.36×2

[1 mark]

Answer _____

7

Do not write outside the box

6 Five points are plotted on a centimetre grid.

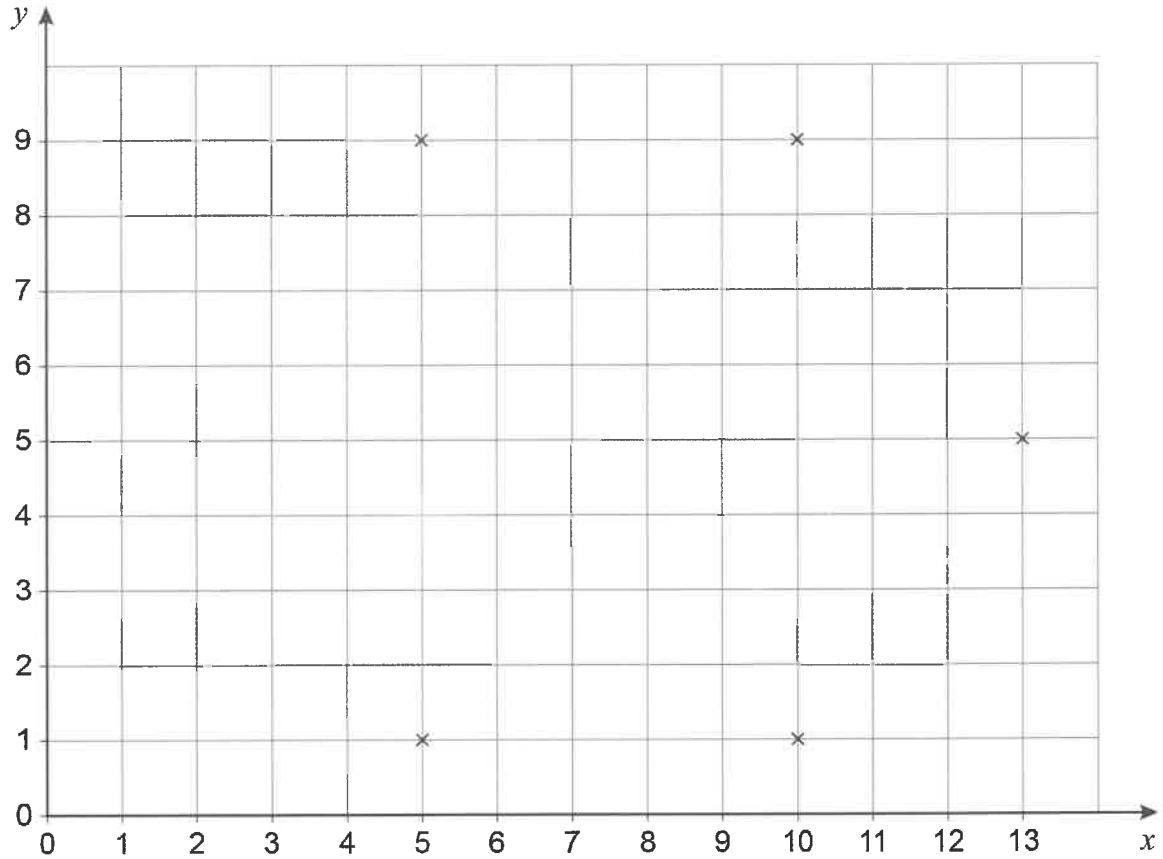

The points are five of the vertices of a hexagon.

Each side of the hexagon has the same length.

Work out **one** possible pair of coordinates of the other vertex.

[2 marks]

Answer (_____ , _____)

Do not write outside the box

7 Amy and Brad each have some money.

Carly has no money.

Amy gives £7 to Carly.

Brad gives £5 to Carly.

Now they all have the same amount of money.

How much money did Amy have to begin with?

[2 marks]

Answer £ _____

Turn over for the next question

4

Do not write outside the box

8 A game is played 50 times.

The vertical line chart shows the winning scores.

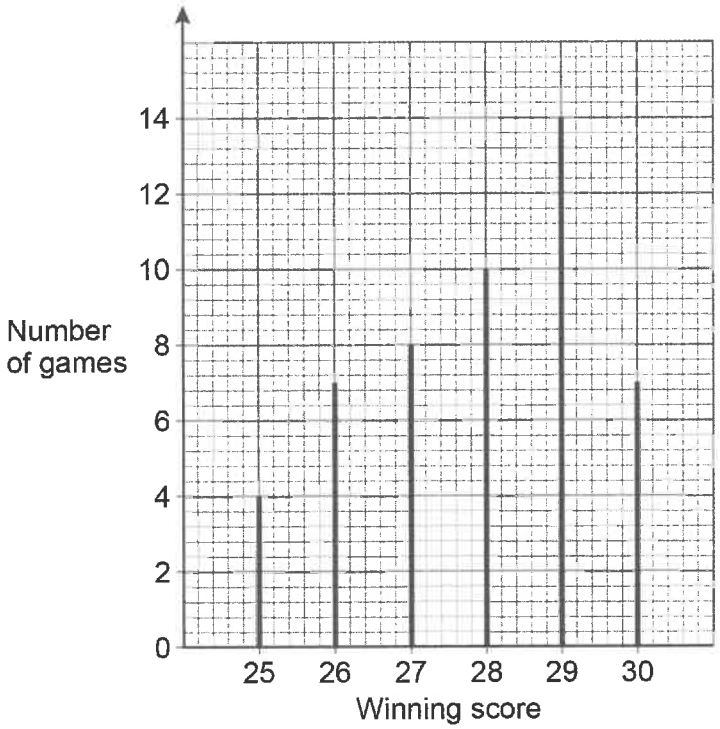

8 (a) Write down the mode.

[1 mark]

Answer _____

Do not write outside the box

The game is played again.

8 (b) Use the chart to estimate the probability that the winning score is 25

[1 mark]

Answer _____

8 (c) Use the chart to estimate the probability that the winning score is 27 or more.

[2 marks]

_____

_____

_____

Answer _____

9 (a) Write down **all** the factors of 18

[2 marks]

Answer _____

9 (b) Work out the lowest common multiple (LCM) of 12 and 15

[2 marks]

_____

_____

_____

Answer _____

8

Do not write outside the box

10 Coaches take people to a festival.

Each coach can take 50 people.

10 (a) From one city there are 820 people.

How many coaches are needed?

[3 marks]

Answer _____

Do not write outside the box

10 (b) From a different city 13 coaches are needed.

Each coach costs £450 to hire.

Work out the total cost of hiring 13 coaches.

[3 marks]

Answer £ _____

Turn over for the next question

6

Do not write outside the box

11 Here is a triangle on a square dotty grid.

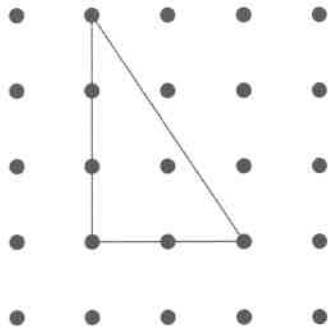

11 (a) On the grid below, show how you can make a parallelogram with **two** of these triangles.

[1 mark]

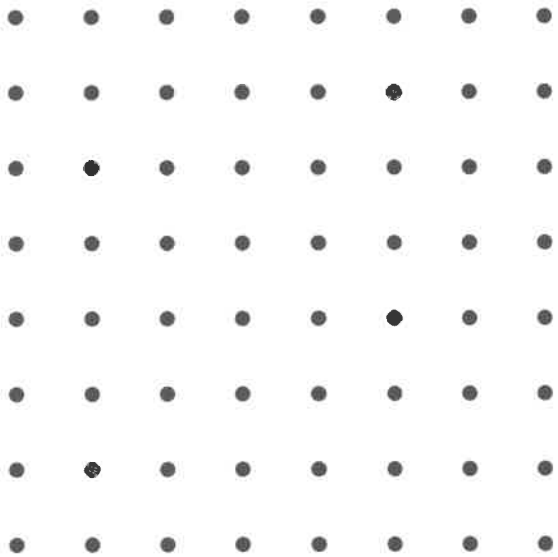

Do not write outside the box

11 (b) On the grid below, show how you can make a trapezium with **three** of these triangles.

[1 mark]

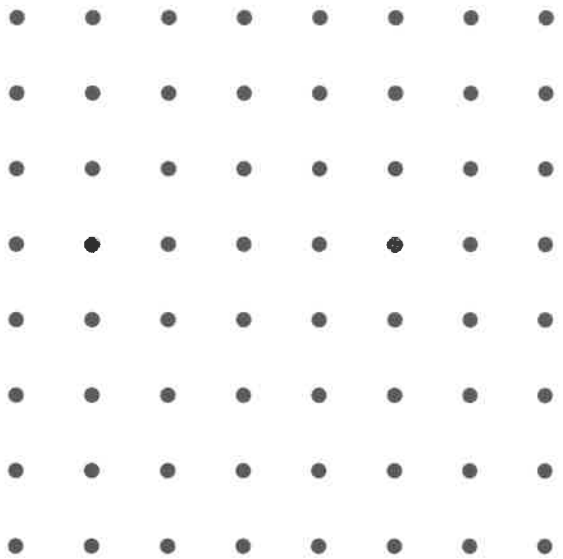

11 (c) On the grid below, show how you can make a rhombus with **four** of these triangles.

[1 mark]

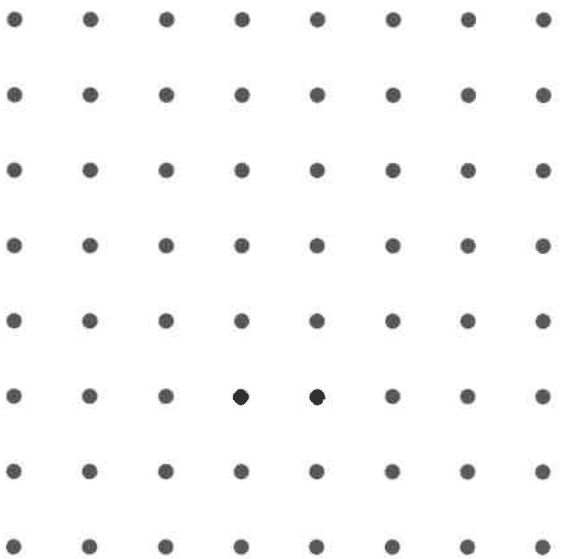

3

Do not write outside the box

12 Work out 65% of 300

[3 marks]

Answer _____

13 In a game the average score was 50

Tom's score was $\frac{5}{2}$ of the average.

Circle Tom's score.

[1 mark]

125 175 30 20

Do not write outside the box

14 Here is a cuboid.

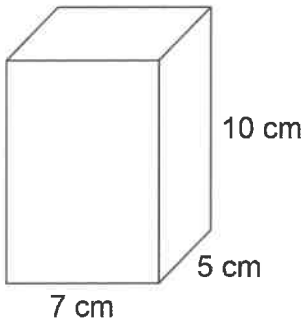

Work out the volume.

[2 marks]

Answer _____ cm^3

15 Circle the shape that has a uniform cross section.

[1 mark]

cone sphere cylinder pyramid

7

Do not write outside the box

16 (a) Here is a map showing points *A* and *B*.

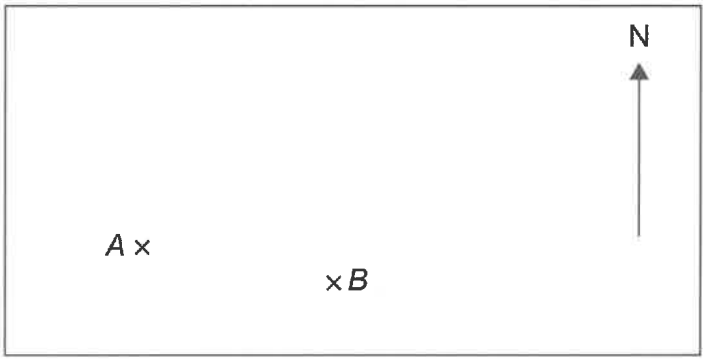

Kemal wants to measure the bearing of ***A* from *B***.

He draws two lines and measures the angle between them.

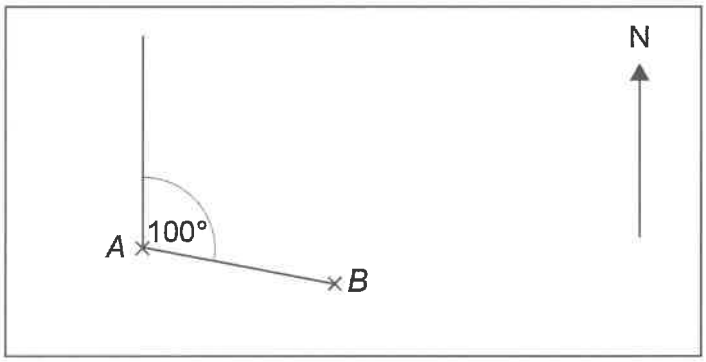

Kemal says that the bearing of *A* from *B* is 100°

Is his method correct?

Give a reason for your answer.

[1 mark]

Do not write outside the box

16 (b) On a different map, the bearing of *D* from *C* is 045°

Nina says,

"*D* is North West of *C*."

Is Nina correct?

Give a reason for your answer.

[1 mark]

_____

_____

16 (c) This map shows an airport, *E*, on an island.

Scale: 1 cm represents 100 km

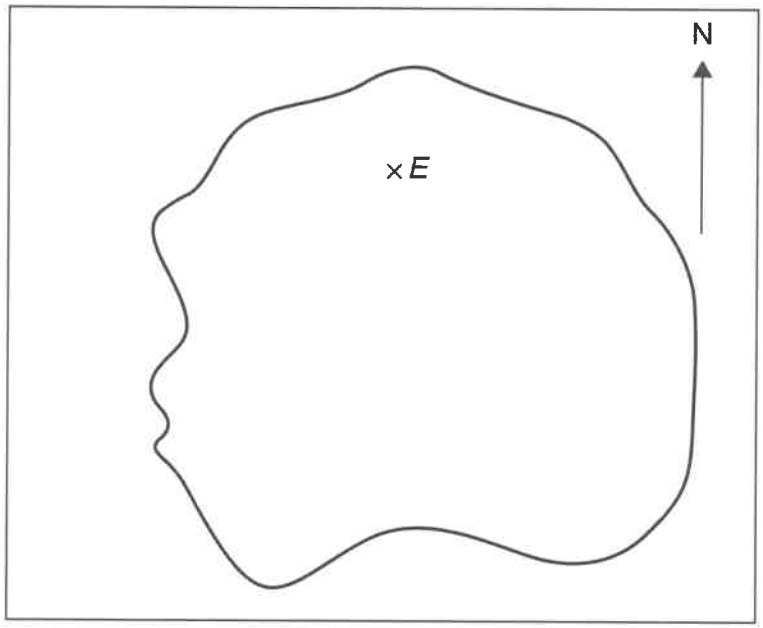

A plane flies due South from the airport.

How far does it fly until it reaches the sea?

[3 marks]

_____

Answer _____ km

5

Turn over ▶

Do not write outside the box

17 (a) Simplify fully 56 : 24

[2 marks]

Answer _____ : _____

17 (b) Write the ratio 5 : 4 in the form n : 1

[1 mark]

Answer _____ : _____

17 (c) Share £180 in the ratio 1 : 9

[2 marks]

Answer £_____ and £_____

Do not write outside the box

18 Here is some data about the people listening to a radio station one day.

	Percentage	**Mean number of hours listening**	**Range of number of hours listening**
Aged 40 or under	21	1.2	4.5
Aged 41 or over	79	6.3	13.9

Compare the data for people aged 40 or under with the data for people aged 41 or over.
Make **three** comparisons.

[3 marks]

Comparison 1 _____

_____

_____

Comparison 2 _____

_____

_____

Comparison 3 _____

_____

_____

Turn over for the next question

8

Do not write outside the box

19 You are given that $4a - 2b = 10$

19 (a) Write down the value of $2a - b$

[1 mark]

Answer _____

19 (b) Write down the value of $2b - 4a$

[1 mark]

Answer _____

19 (c) You are given that $4a - 2b = 10$ **and** $a + c = 3$

Write an expression in a, b and c that is equal to 23
Give your answer in its simplest form.
You **must** show your working.

[2 marks]

_____

_____

_____

_____

_____

_____

Answer _____

Do not write outside the box

20 (a) Write 0.00097 in standard form.

[1 mark]

Answer _____

20 (b) Work out $\dfrac{3 \times 10^5}{4 \times 10^3}$

Give your answer as an ordinary number.

[2 marks]

_____

_____

_____

_____

_____

_____

Answer _____

Turn over for the next question

7

Do not write outside the box

21 Anna plays a game with an ordinary, fair dice.

If she rolls 1 she wins.

If she rolls 2 or 3 she loses.

If she rolls 4, 5 or 6 she rolls again.

When she has to roll again,

if she rolls an odd number she wins

if she rolls an even number she loses.

21 (a) Complete the tree diagram with the four missing probabilities.

[2 marks]

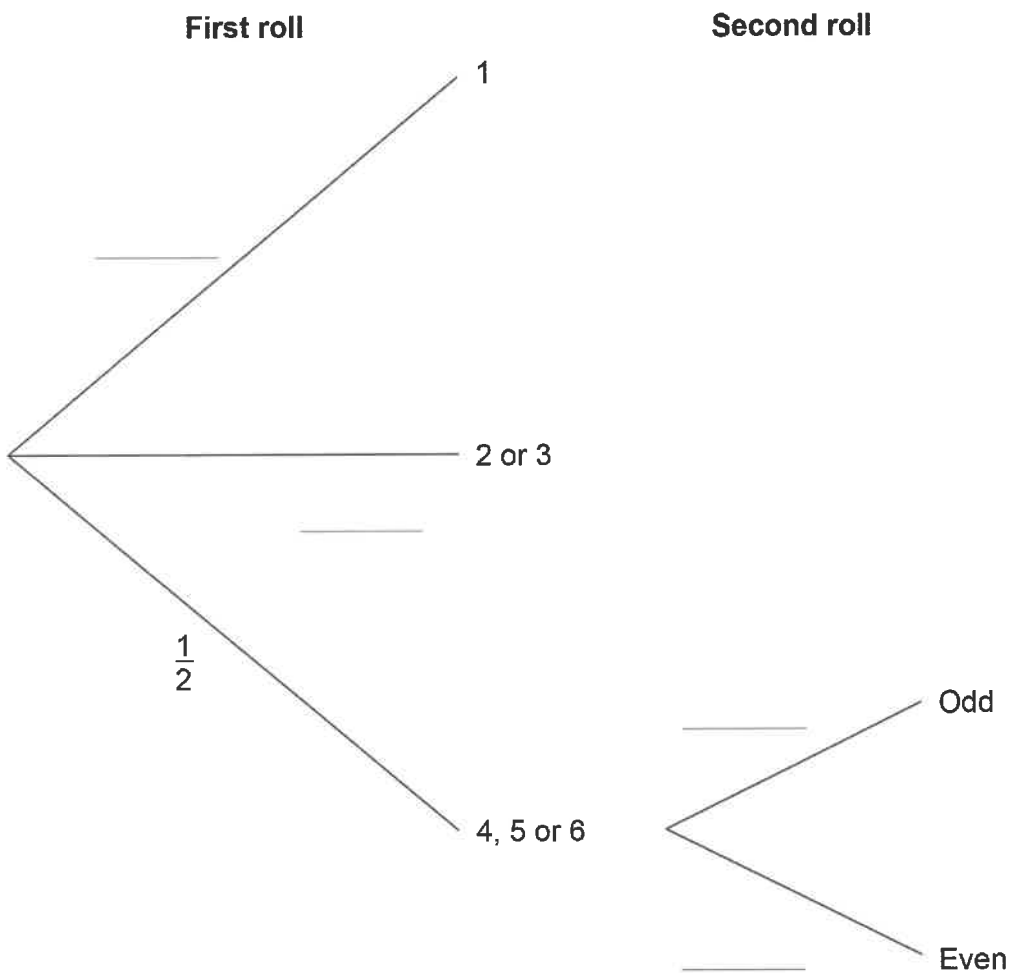

Do not write outside the box

21 (b) Is Anna more likely to win or to lose?

You **must** work out the probability that she wins.

[4 marks]

Turn over for the next question

6

Do not write outside the box

22 Three friends arrive at a party.

Their arrival increases the number of people at the party by 20%

In total, how many people are now at the party?

[2 marks]

Answer _____

Do not write outside the box

23 Work out the value of $(3^{12} \div 3^5) \div (3^2 \times 3)$

[3 marks]

Answer _____

24 (a) $a + b = 0$

Which of these is equal to b?
Circle your answer.

[1 mark]

0 $\quad$ $\frac{1}{a}$ $\quad$ a $\quad$ $-a$

24 (b) $c \times d = 1$

Which of these is equal to d?
Circle your answer.

[1 mark]

1 $\quad$ $\frac{1}{c}$ $\quad$ c $\quad$ $-c$

7

Do not write outside the box

25 A shaded semicircle is inside a circle as shown.

Not drawn accurately

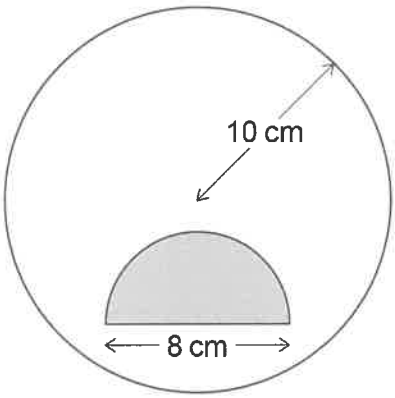

The **radius** of the circle is 10 cm

The **diameter** of the semicircle is 8 cm

How many times bigger is the unshaded area than the shaded area?

[4 marks]

Answer _____

Do not write outside the box

26 The number of items, n, made in 1 hour by a machine is given by $n = \frac{60}{t}$

t is the time in minutes the machine takes to make one item.

The value of t changes for different types of item.

26 (a) On the grid below, draw the graph of $n = \frac{60}{t}$ for values of t from 1 to 4

[2 marks]

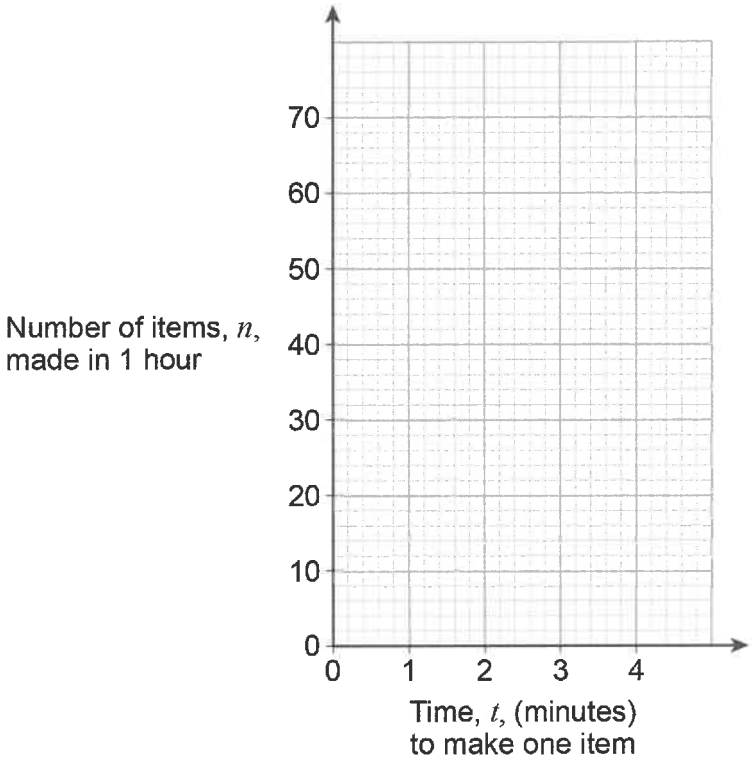

26 (b) The machine takes 3 minutes 30 seconds to make one item.

Use your graph to estimate the value of n.

[2 marks]

Answer _____

8

Turn over ▶

Do not write outside the box

27 Rearrange $x = 2y - 6$ to make y the subject.

[2 marks]

Answer _____

28 Multiply out and simplify $(x + 5)(x - 1)$

[2 marks]

Answer _____

END OF QUESTIONS

4